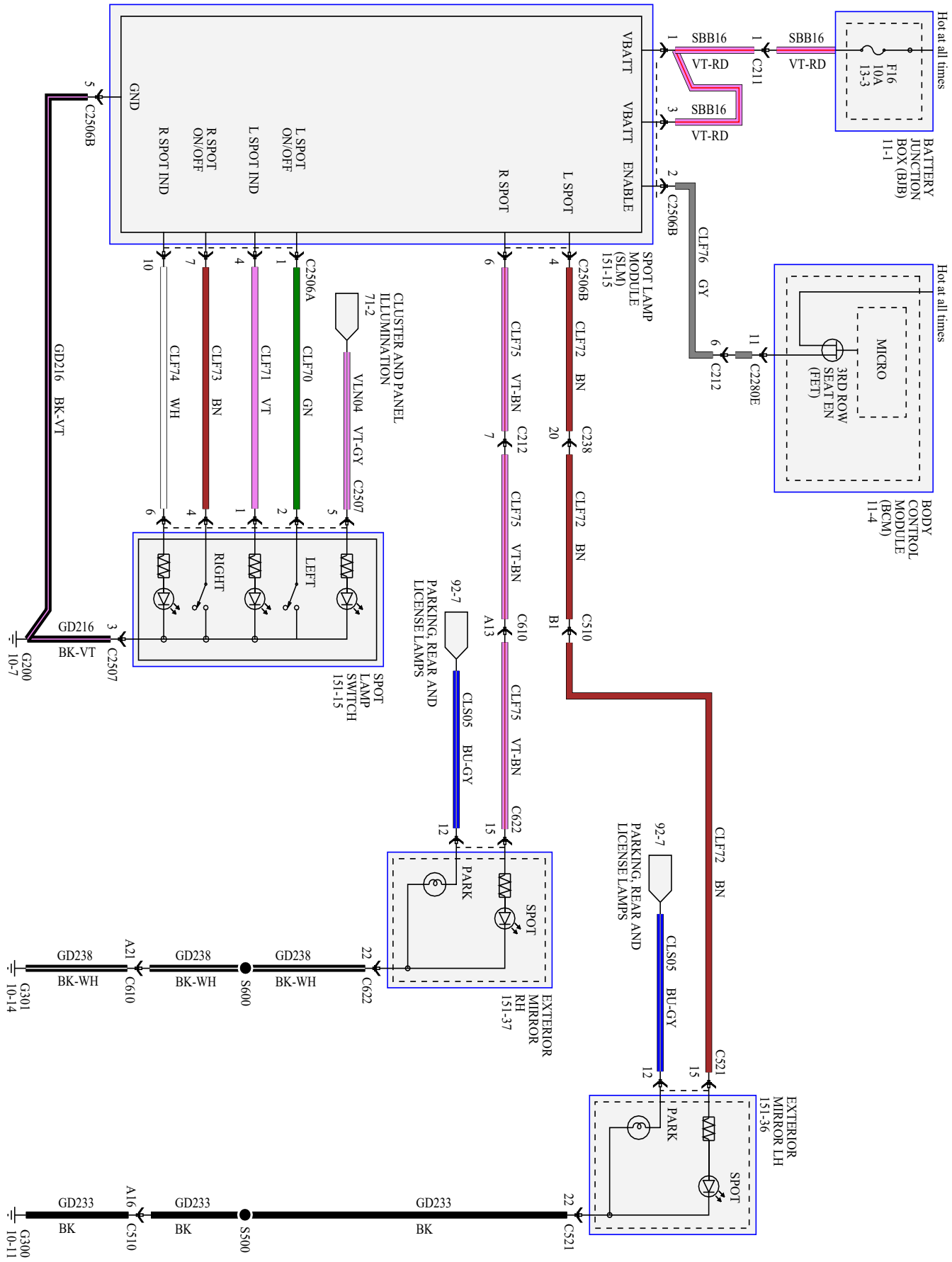
Hot at all times
BATTERY JUNCTION BOX (BJB) 11-1
F16 10A 13-3
SBB16
VT-RD
C211
SPOT LAMP MODULE (SLM) 151-15
VBATT
VBATT
ENABLE
GND
L SPOT
R SPOT
L SPOT ON/OFF
L SPOT IND
R SPOT ON/OFF
R SPOT IND
C2506B
CLF76 GY
C212
C2280E
Hot at all times
BODY CONTROL MODULE (BCM) 11-4
MICRO
3RD ROW SEAT EN (FET)
CLF72 BN
C238
C510
B1
CLF75 VT-BN
C610
C622
A13
CLF73 BN
CLF74 WH
CLF71 VT
CLF70 GN
C2506A
VLN04 VT-GY
C2507
CLUSTER AND PANEL ILLUMINATION 71-2
SPOT LAMP SWITCH 151-15
RIGHT
LEFT
GD216 BK-VT
G200 10-7
92-7
PARKING, REAR AND LICENSE LAMPS
CLS05 BU-GY
PARK
SPOT
EXTERIOR MIRROR RH 151-37
EXTERIOR MIRROR LH 151-36
C521
GD238 BK-WH
A21
C610
S600
G301 10-14
GD233 BK
A16
S500
G300 10-11